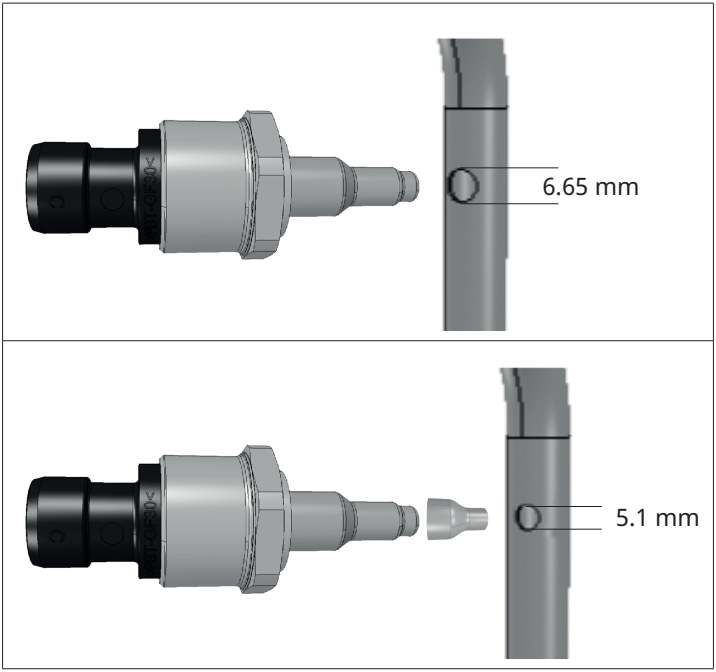
6.65 mm
5.1 mm