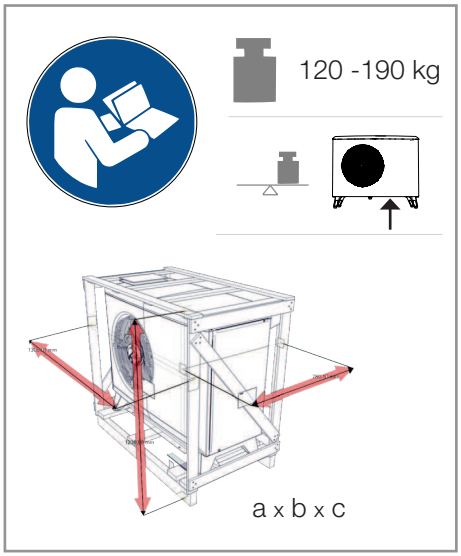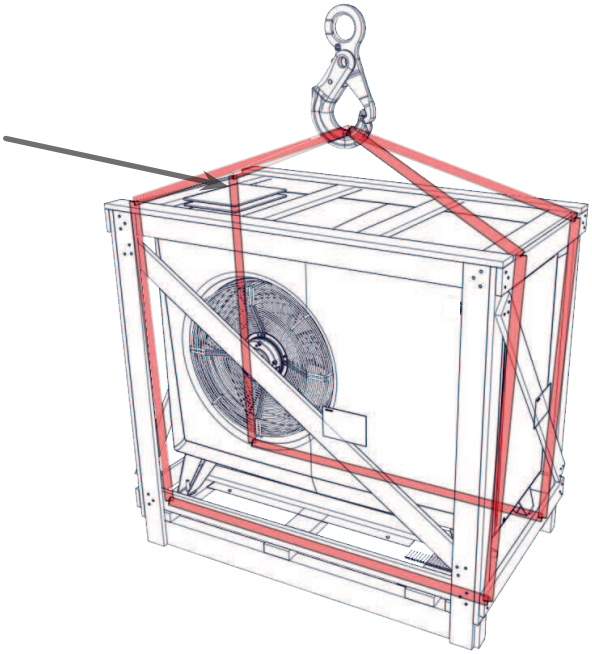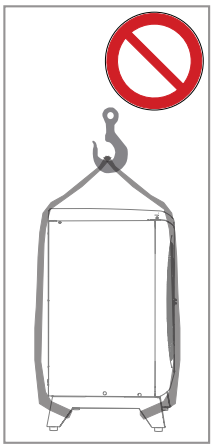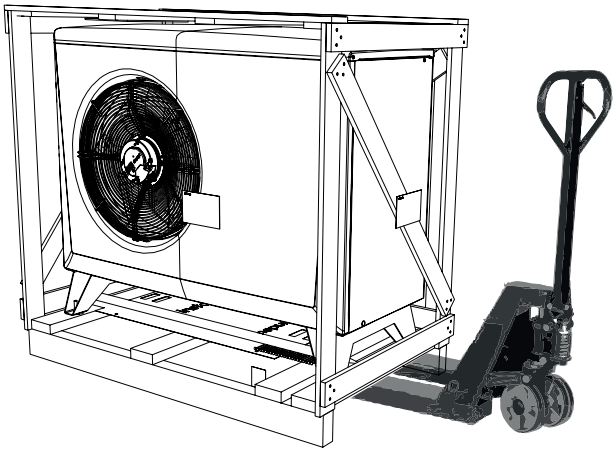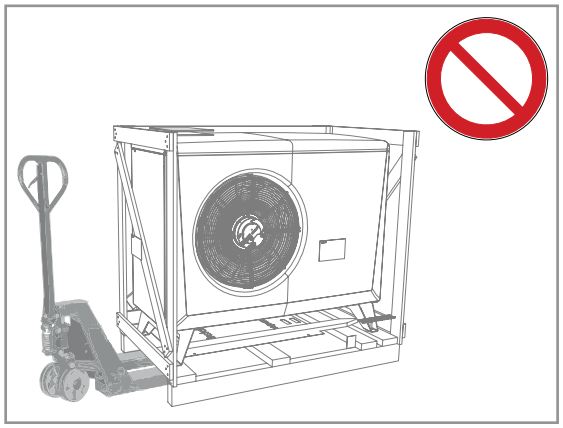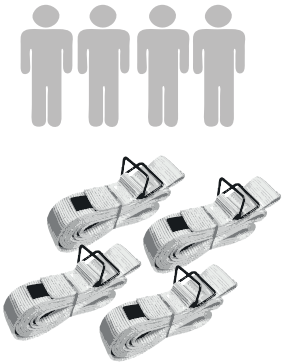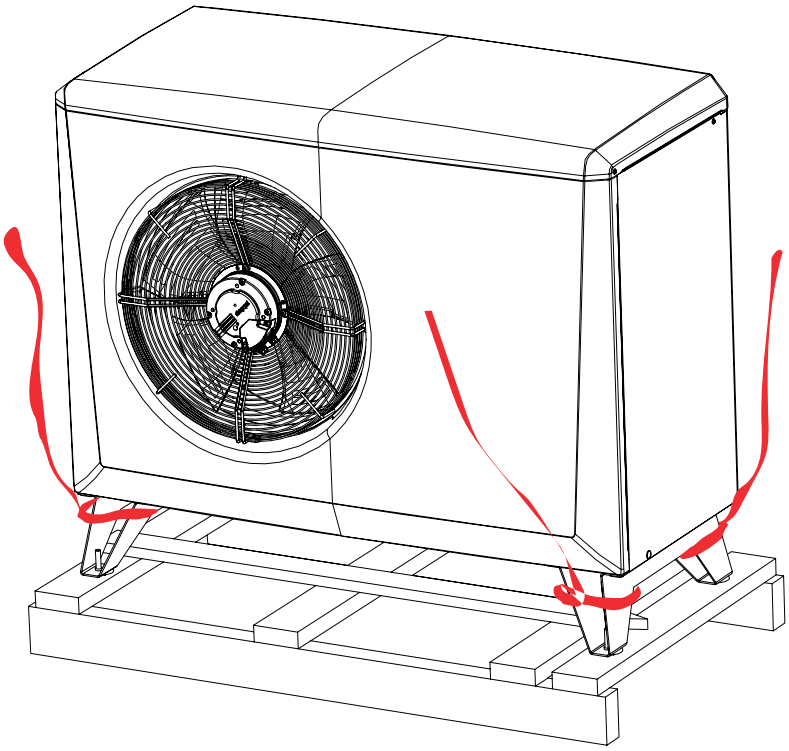
120 -190 kg
a x b x c